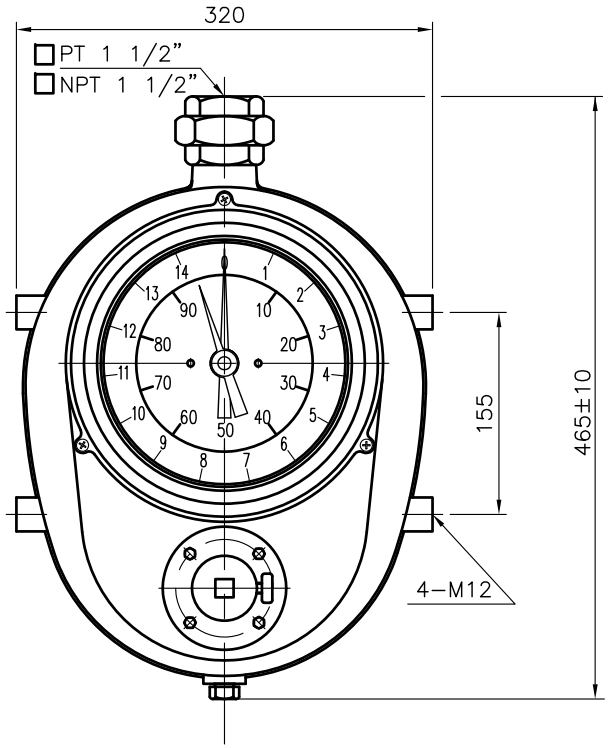

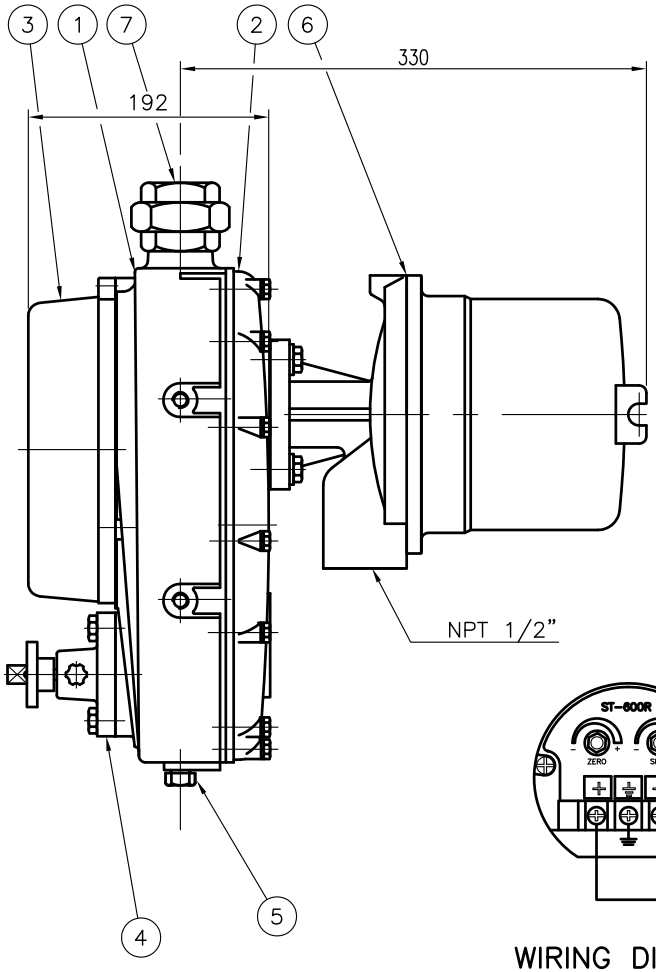

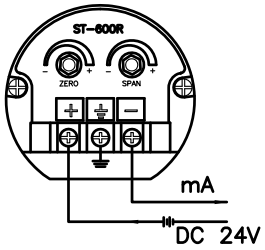

WIRING DIAGRAM

DESIGN DATA

CODE	N/A		
UNIT	mm		
KIND OF FLUID		–	
PRESS.	DESIGN	1(Max.)	Kg/Cm²
	OPERATING	–	Kg/Cm²
TEMP. (SENSOR)	DESIGN	−10 ~ 90	°C
	OPERATING	–	°C
TEMP. (ELECTRONICS)	DESIGN	−10 ~ 60	°C
	OPERATING	–	°C
CONTACT RATING		–	
POWER SUPPLY		15−32V DC(2 WIRE)	
ENCLOSURE		WEATHER PROOF	
OUTPUT		4−20 mA	
VISCOSITY		1Pa.s/10P Less	
MOISTURE		Max 80%RH	
MEASURING RANGE		(mm) Max. 20000mm	
TAG NO.		–	

NOTES

REVISION

NO	DESCRIPTION	MATERIAL	Q'TY	SPECIFICATION	REMARK
7	UNION	304SS	1	1 1/2"	
6	TRANSMITTER ASS'Y	ADC 12	1		
5	DRAIN VALVE	MBsBE2	1		
4	HOIST GEAR ASS'Y	AC2B	1		
3	SCALE COVER	ADC 12	1		
2	BACK COVER	ADC 12	1		
1	INDICATOR BODY	ADC 12	1		

BILL OF MATERIAL

REV.	DESCRIPTION	DATE	DESIGNED	REVIEWED	APPROVED
0	FOR APPROVAL				

CUSTOMER: –

PROJECT: –

TITLE: LIQUID TANK LEVEL GAUGE
SLT−2200−A−1−A(B)−( )−A−1−A
ASSEMBLY DRAWING

MANUFACTER: SeoJin Instech Co., Ltd.

SCALE	ERP CODE	Work Order No.	REV.
N/S	0000	–	0

DWG NO. SJ−M021−DWG−AP002